# Sequoia Firebox Assembly

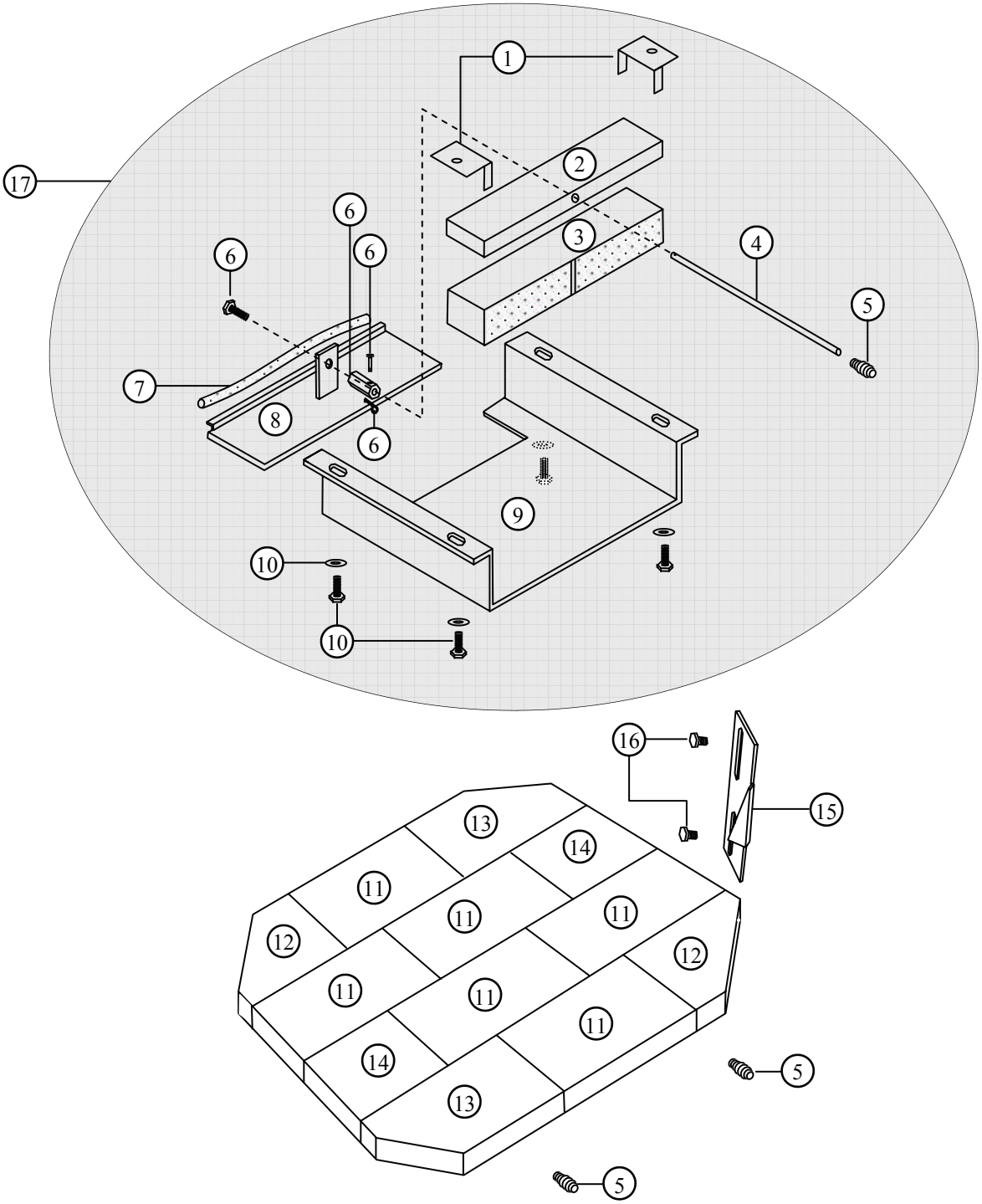


| ID# | Description | Part # | ID# | Description | Part # |
|---|---|---|---|---|---|
| 1 | Anti-slide clip (2 ea.) | KR-SEQCATCLIP | 9 | Baffle (no catalytic/rod/plate) | KR-SEQBAFFLE |
| 2 | Catalytic hold down clamp | KR-SEQCATCLAMP | 10 | Baffle installation bolts | KR-HDWE3 |
| 3 | Catalytic converter | KR-SEQCATALYTIC | 11 | Brick: 9” x 4-1/2” | KR-BRICK |
| 4 | Baffle bypass rod | KR-SEQBYPASSROD | 12 | Brick: 5-3/4” x 4-1/2” lopped | KR-SEQBRICK1 |
| 5 | Control spring, pewter | KR-SPRING1PEWTER | 13 | Brick: 9” x 4-1/2” lopped | KR-SEQBRICK2 |
| 5 | Control spring, gold | KR-SPRING1GOLD | 14 | Brick: 5-3/4” x 4-1/2” | KR-SEQBRICK3 |
| 6 | Baffle bypass rod hardware kit | KR-HDWE2 | 15 | Door wedge assembly | KR-SEQDRWEDGE |
| 7 | Baffle bypass gasket | KR-BPGASKET | 16 | Hardware: 1/4-20 x 1/2” (6) | KR-HDWE1 |
| 8 | Baffle bypass plate | KR-SEQBYPASS | 17 | Complete baffle set. | KR-SEQBAFFLESET |

# Ashwood or Sequoia Door Assembly

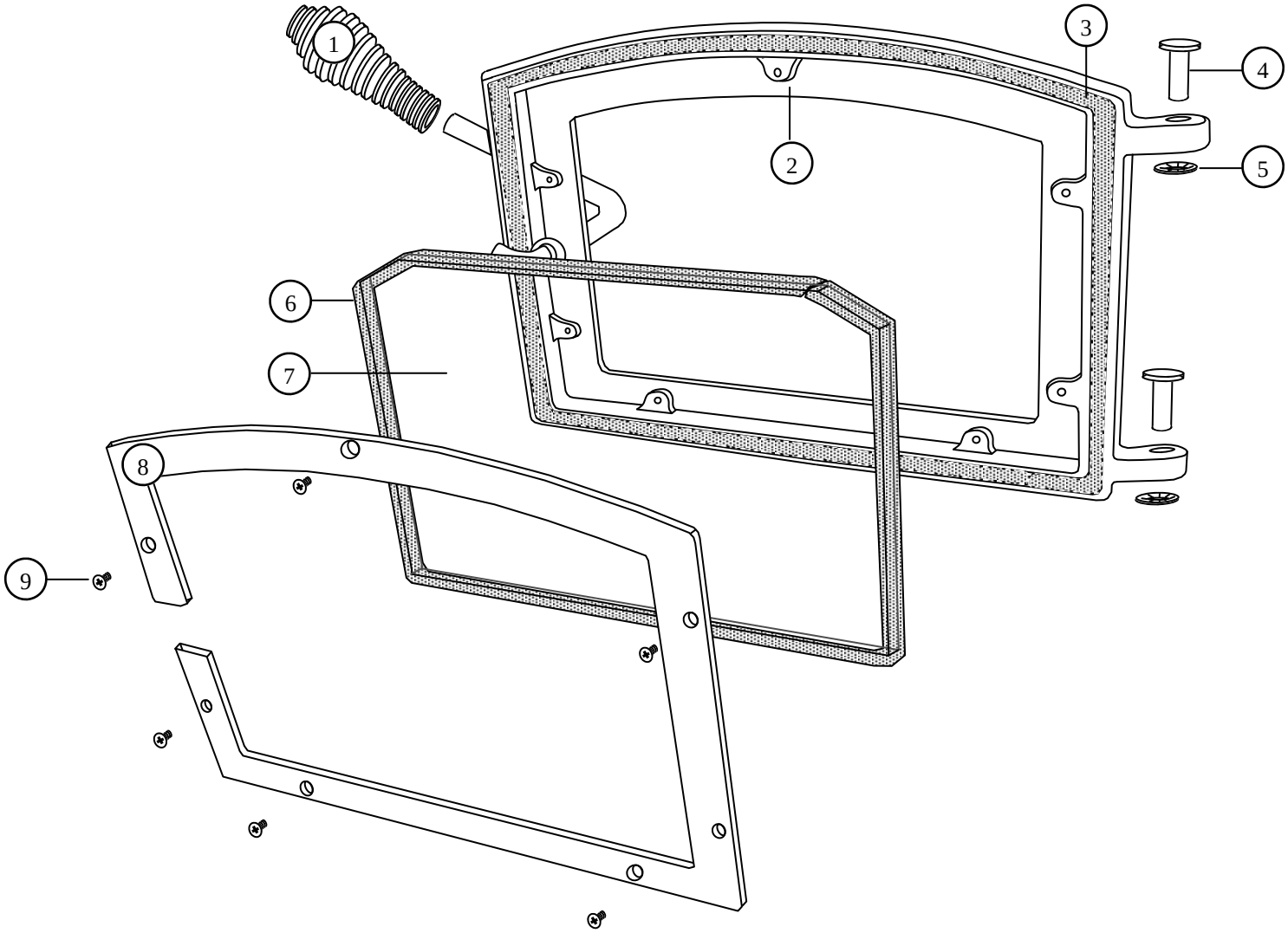


| ID # | Description | Part # | ID # | Description | Part # |
|---|---|---|---|---|---|
| 1 | Door control handle: 1/2” pewter | KR-SPRING2PEWTER | 5 | Door pin retainer. (set of 2) | KR-DOORPINRETAIN |
| 1 | Door control handle: 1/2” gold | KR-SPRING2GOLD | 6 | Gasket: 3/4” x 5/8” tape. | KR-GLASSGASKET |
| 2 | Door casting: Black w/ handle assembly | KR-DOOR2CAST | 7 | Door 2 Glass: Includes gasket. | KR-GLASS2 |
| 2 | Door casting: Pewter w/ handle assembly | KR-DOOR2PEWTER | 8 | Glass Retainer: Includes screws | KR-GLASSRETAIN2 |
| 2 | Door casting: Gold w/ handle assembly | KR-DOOR2GOLD | 9 | Hardware: #10 screw. Pack of 7 | KR-GLASSSCREW |
| 3 | Gasket: 5/8” fiberglass rope w/ cement | KR-DOORGASKET | | | |
| 4 | 1/2” Door pin. (set of 2) | KR-DOORPIN3 | | | |